Science &Plants for Schools

Student Sheet 9

www.saps.org.uk

Growing radishes in film cans

Read these instructions carefully before you start.

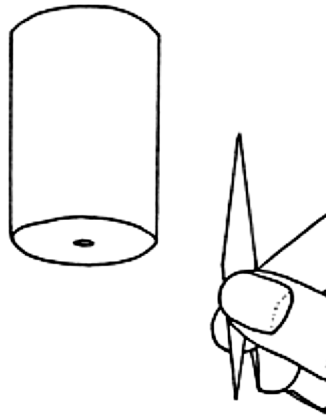

1. Make a 2mm hole in the base of a black film can and insert a wick.

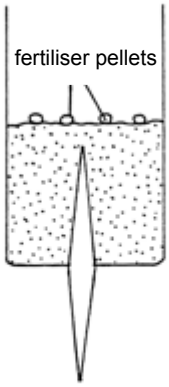

2. Half fill with a growing mix of equal parts peat and vermiculite. Add four slow-release fertiliser pellets.

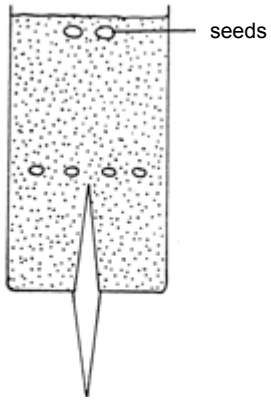

3. Add more growing mix. Sow 2 or 3 radish seeds and lightly cover with the growing mix.

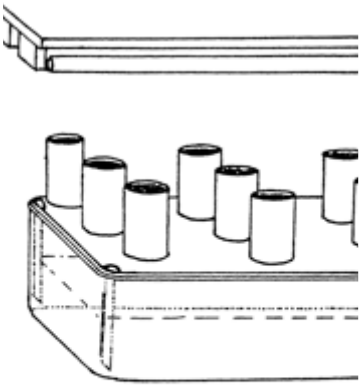

4. Add water until it drops from the wick, then place the can on capillary matting on a reservoir, under a light-bank.

5. After 4-5 days thin to one healthy seedling per can.

6. After 16-20 days harvest your radishes.