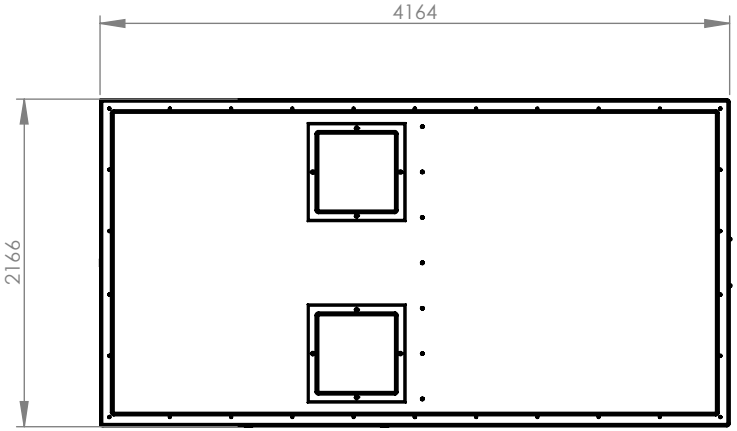

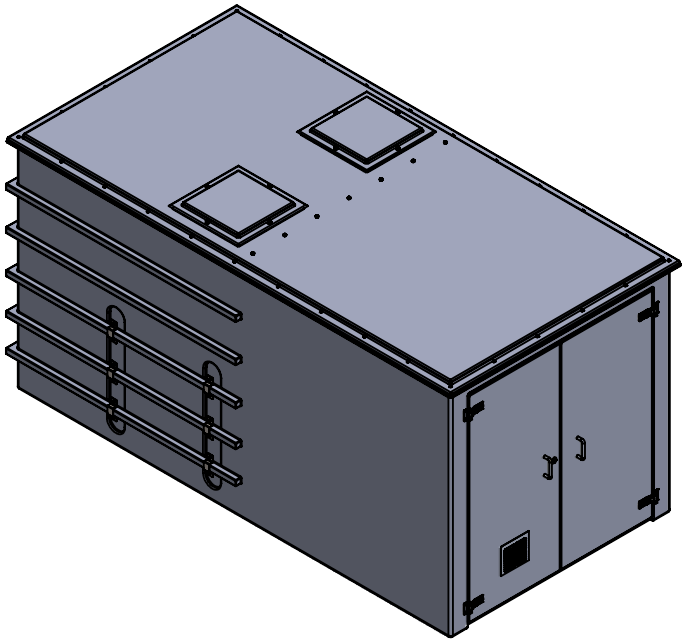

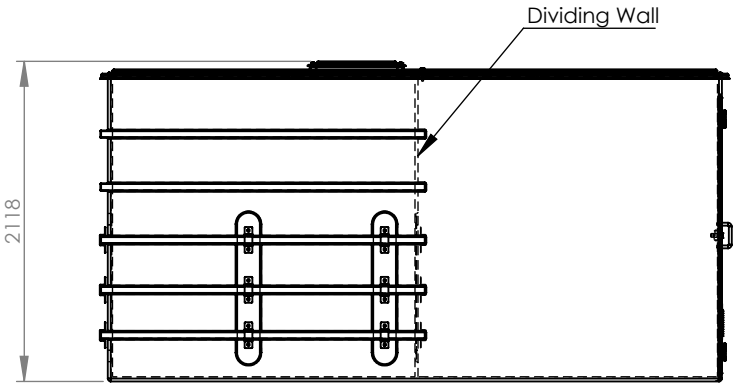

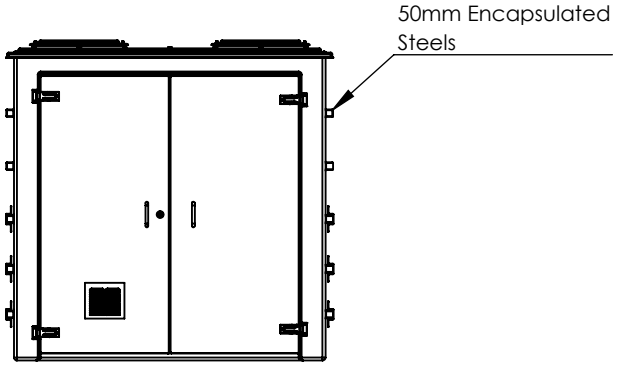

TITLE CUCOMP.16,000-8000		NOTE: All Purewater tanks must be fully supported on a flat,level & continuous foundation providing structural support to the tank when full to maximum operating capacity.It is essential that the user refers to the conditions of installation document prior to the installation of the tank.Under no circumstances should the tank body be used to provide support to pipework and ancillary items. The tank lid is a structural part of the tank and must be in place and fitted correctly when water is contained within the tank.	DESCRIPTION: CUCOMP.16,000-8000.AG Airgap Combination Unit	DATE	VERSION	NOTES	TANK SPECIFICATION :		
DRAWN BY N.Amechi	DATE 20/01/2023			19/01/2023	A	FIRST ISSUE	WET COMPARTMENT	2000 x 2000 x 2000mm	pure water storage ltd
							DRY COMPARTMENT	1970 x 2000 x 2000mm	
							EXTERNAL DIMENSIONS	4164 x 2166 x 2118mm	
							NOMINAL CAPACITY	8000 Litres	
							INSULATION THICKNESS	25mm	
CUSTOMER CUSTOMER		ALL DIMENSIONS+/- 5mm UNLESS OTHERWISE STATED	A4	ALL DIMENSIONS IN MM - DO NOT SCALE			MATERIAL	GRP	SCALE:1:50 SHEET 1 OF 2

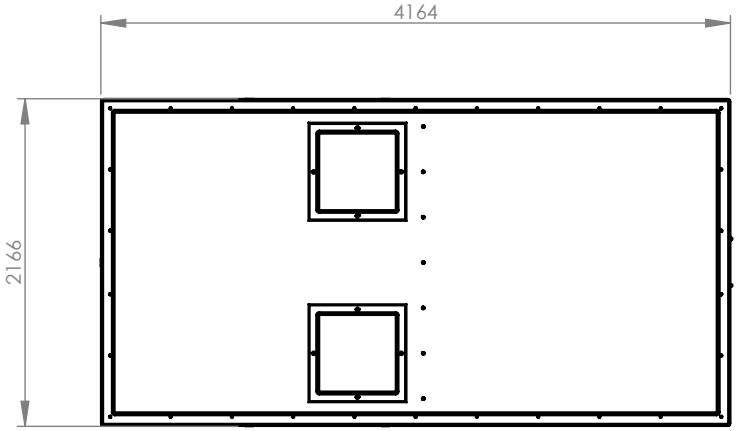

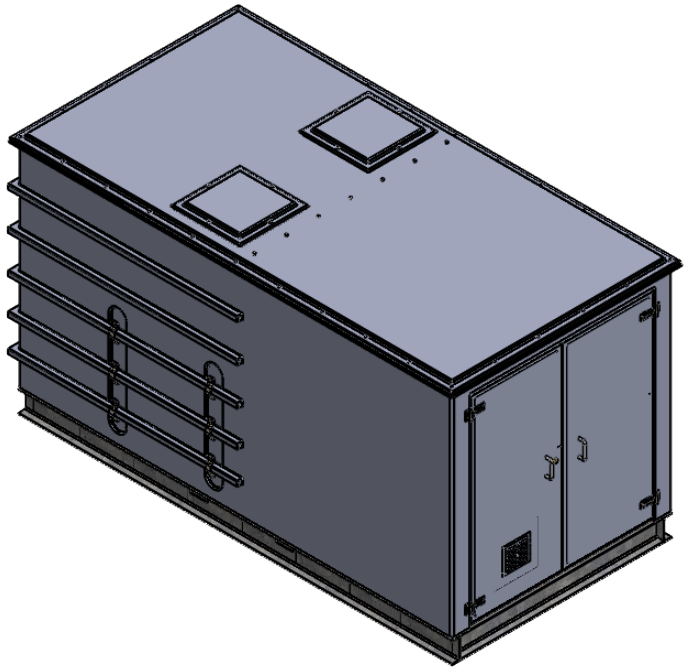

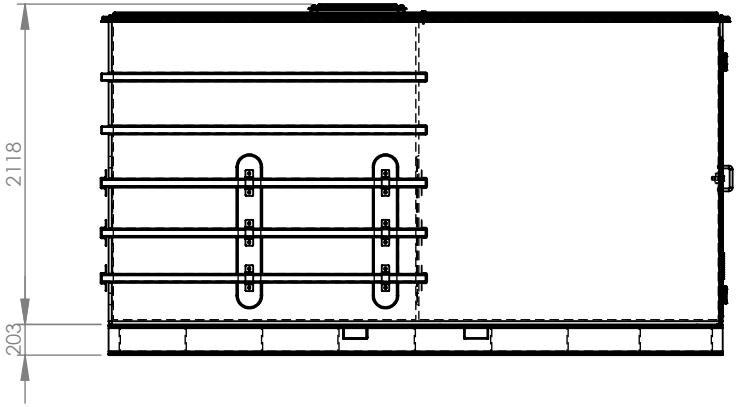

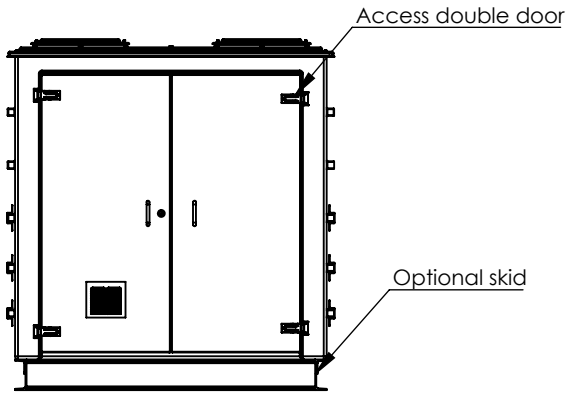

TITLE
CUCOMP.16,000-8000
c/w skid

DRAWN BY N.Amechi
DATE 20/01/2023

CUSTOMER CUSTOMER

NOTE:
All Purewater tanks must be fully supported on a flat,level & continuous foundation providing structural support to the tank when full to maximum operating capacity.It is essential that the user refers to the conditions of installation document prior to the installation of the tank.Under no circumstances should the tank body be used to provide support to pipework and ancillary items. The tank lid is a structural part of the tank and must be in place and fitted correctly when water is contained within the tank.

ALL DIMENSIONS+/- 5mm
UNLESS OTHERWISE STATED

A4

DESCRIPTION:

CUCOMP.16,000-8000.AG Airgap Combination Unit c/w skid.

ALL DIMENSIONS IN MM - DO NOT SCALE

DATE	VERSION	NOTES
19/01/2023	A	FIRST ISSUE

TANK SPECIFICATION :

WET COMPARTMENT	2000 x 2000 x 2000mm
DRY COMPARTMENT	1970 x 2000 x 2000mm
EXTERNAL DIMENSIONS	4164 x 2166 x 2118mm
NOM. CAPACITY	8000 Litres
INSULATION THICKNESS	25mm
MATERIAL	GRP

pure water storage ltd

SCALE:1:50

SHEET 2 OF 2