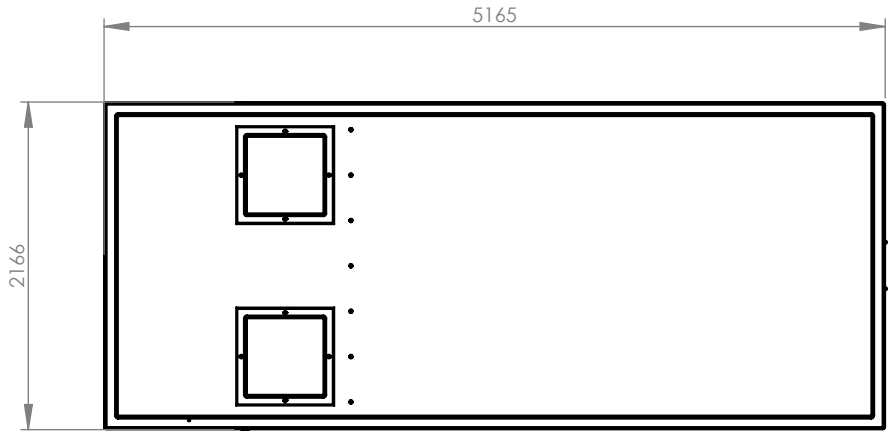

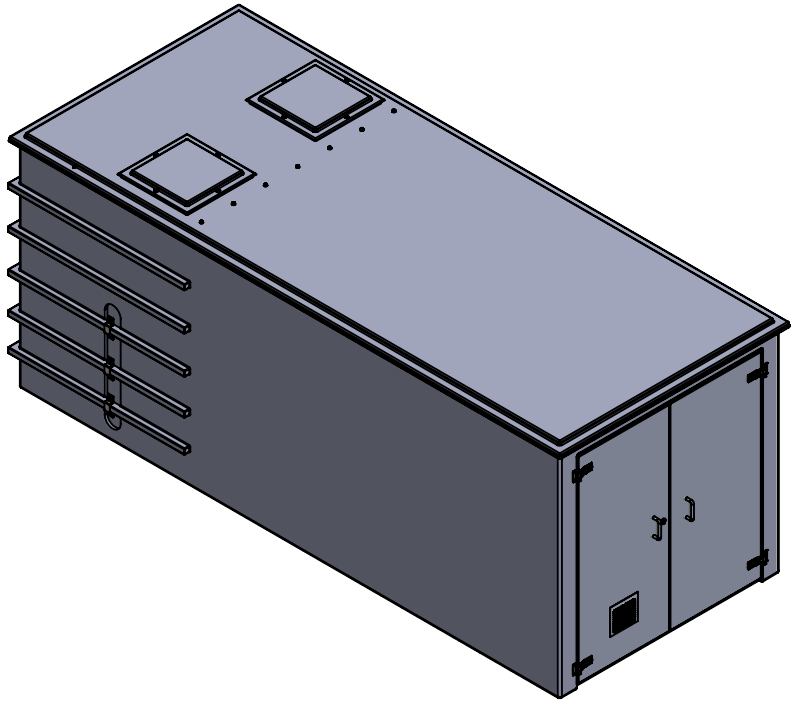

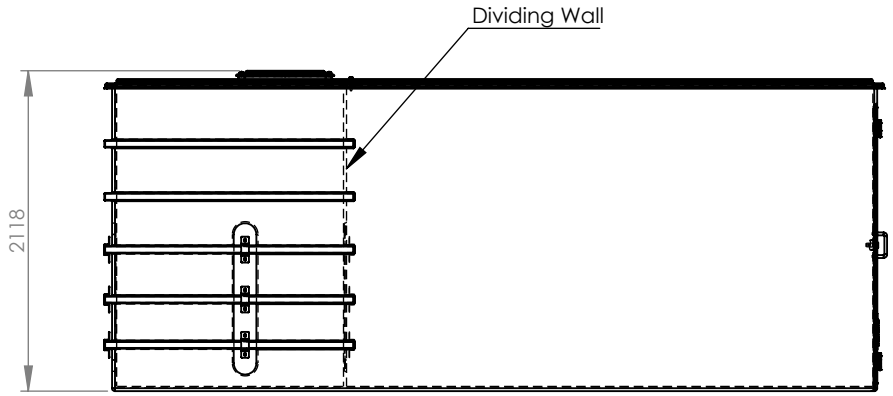

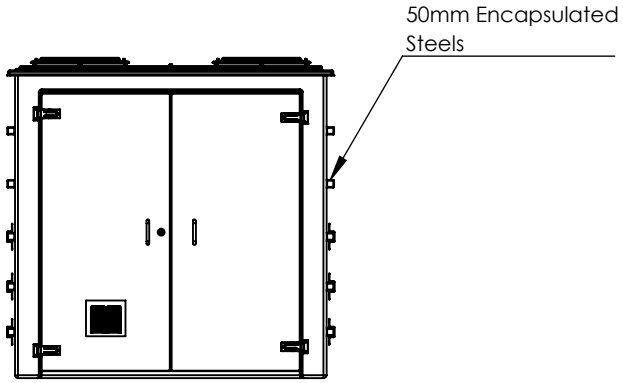

TITLE

CUCOMP.20000-6000

DRAWN BY N.Amechi DATE 20/01/2023

CUSTOMER CUSTOMER

NOTE:
All Purewater tanks must be fully supported on a flat,level & continuous foundation providing structural support to the tank when full to maximum operating capacity.It is essential that the user refers to the conditions of installation document prior to the installation of the tank.Under no circumstances should the tank body be used to provide support to pipework and ancillary items. The tank lid is a structural part of the tank and must be in place and fitted correctly when water is contained within the tank.

ALL DIMENSIONS+/- 5mm
UNLESS OTHERWISE STATED

A4

DESCRIPTION:

CUCOMP.20000-6000 AG Airgap Combination Unit.

ALL DIMENSIONS IN MM - DO NOT SCALE

DATE	VERSION	NOTES
20/01/2023	A	FIRST ISSUE

TANK SPECIFICATION :

WET COMPARTMENT	1500 x 2000 x 2000mm
DRY COMPARTMENT	3470 x 2000 x 2000mm
EXTERNAL DIMENSIONS	5165 x 2166 x 2118mm
NOMINAL CAPACITY	6000 Litres
INSULATION THICKNESS	25mm
MATERIAL	GRP

pure water storage ltd

SCALE:1:50

SHEET 1 OF 2

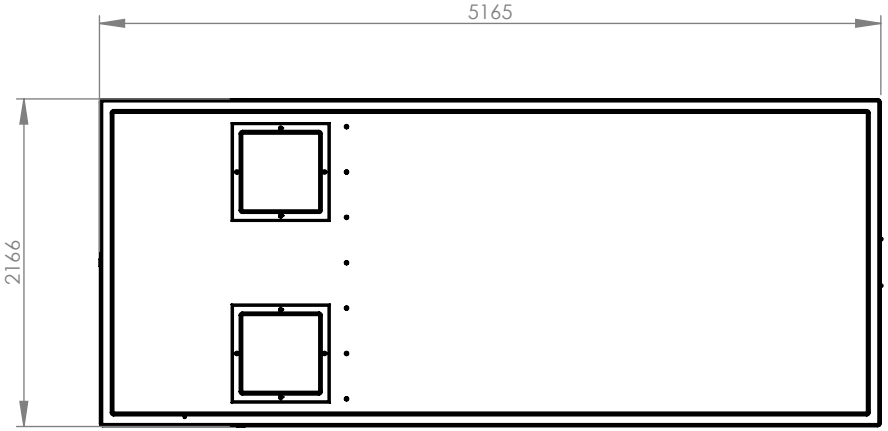

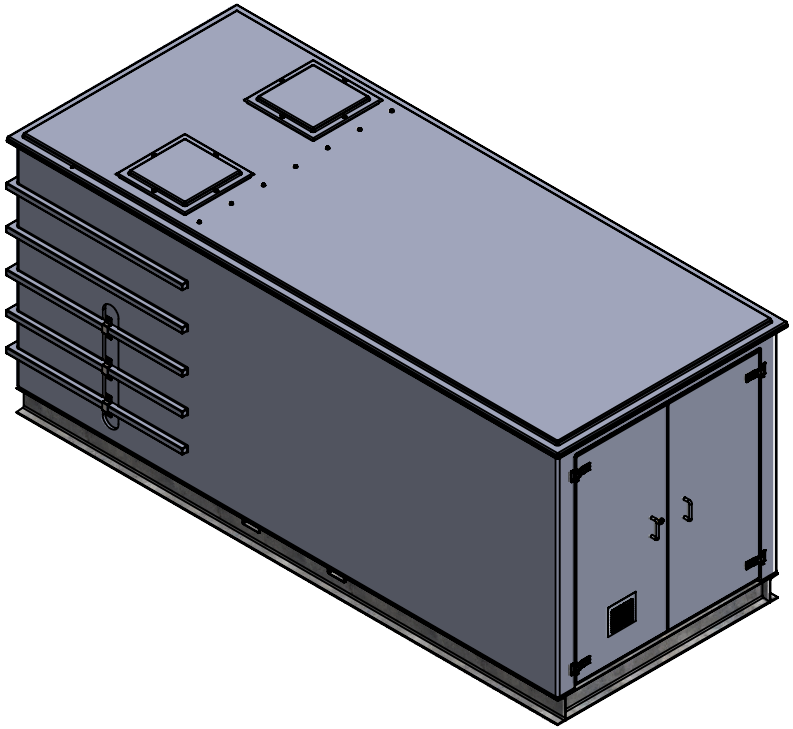

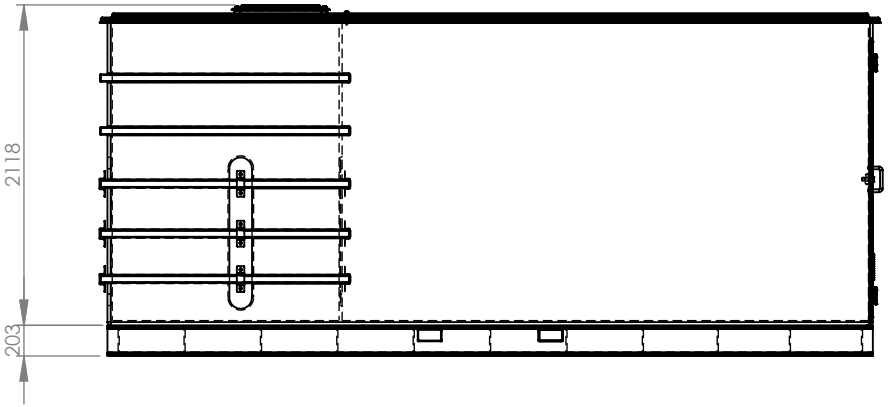

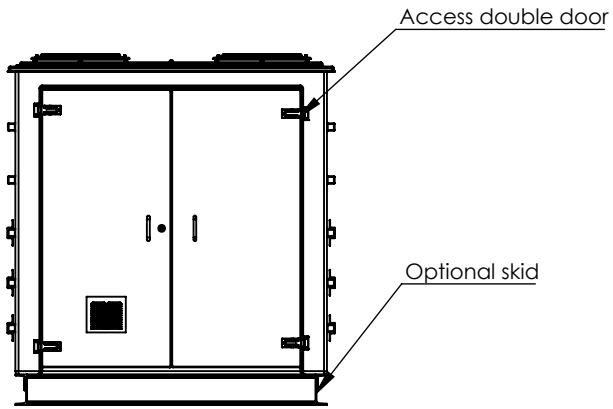

TITLE
CUCOMP.20000-6000
c/w skid

DRAWN BY N.Amechi
DATE 20/01/2023

CUSTOMER CUSTOMER

NOTE:
All Purewater tanks must be fully supported on a flat,level & continuous foundation providing structural support to the tank when full to maximum operating capacity.It is essential that the user refers to the conditions of installation document prior to the installation of the tank.Under no circumstances should the tank body be used to provide support to pipework and ancillary items. The tank lid is a structural part of the tank and must be in place and fitted correctly when water is contained within the tank.

ALL DIMENSIONS+/- 5mm
UNLESS OTHERWISE STATED

A4

DESCRIPTION:

CUCOMP.20000-6000 AG Airgap Combination Unit c/w steel skid.

ALL DIMENSIONS IN MM - DO NOT SCALE

DATE	VERSION	NOTES
20/01/2023	A	FIRST ISSUE

TANK SPECIFICATION :

WET COMPARTMENT	1500 x 2000 x 2000mm
DRY COMPARTMENT	3470 x 2000 x 2000mm
EXTERNAL DIMENSIONS	5165 x 2166 x 2118mm
NOM. CAPACITY	6000 Litres
INSULATION THICKNESS	25mm
MATERIAL	GRP

pure water storage ltd

SCALE:1:50

SHEET 2 OF 2